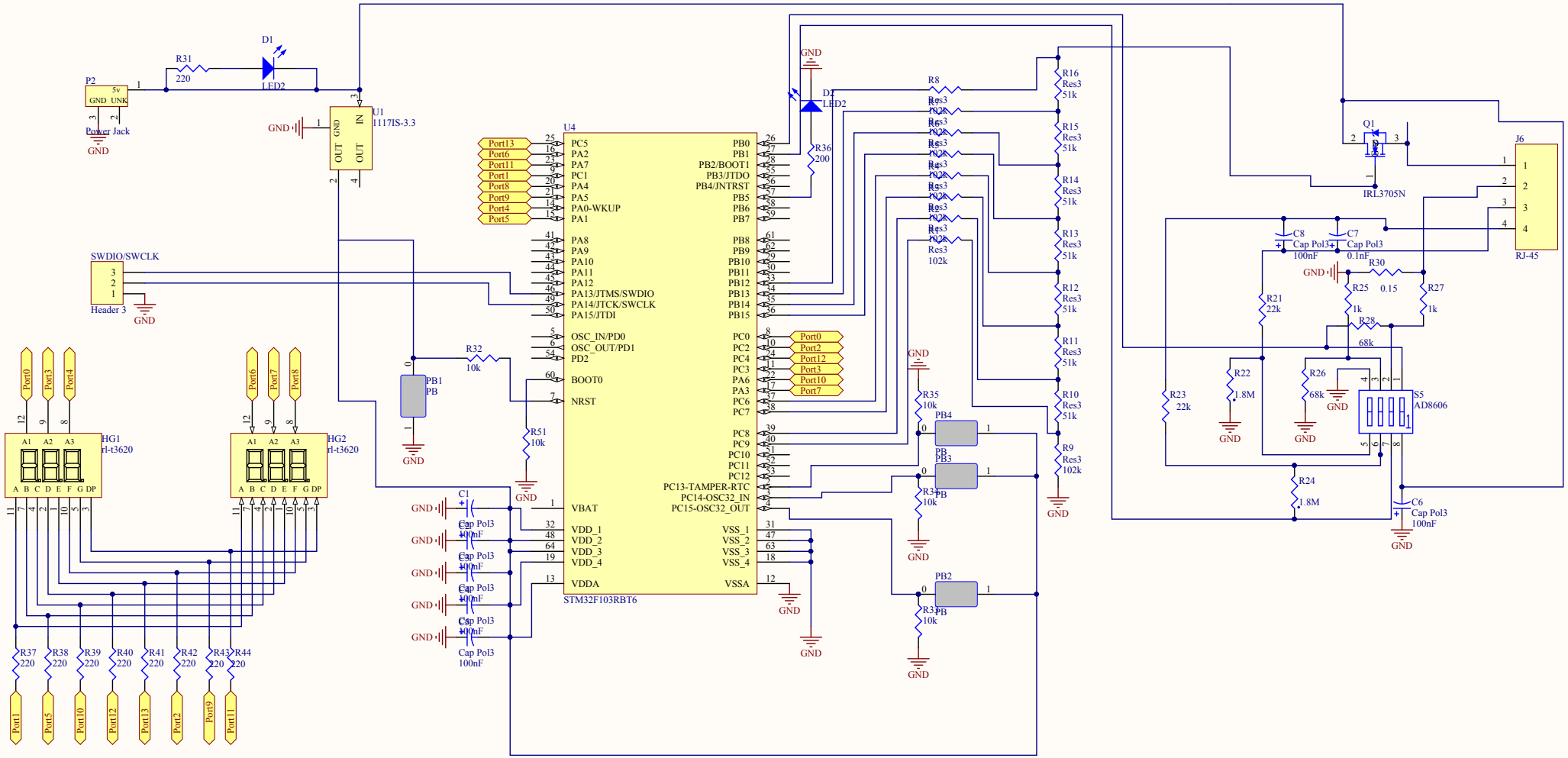
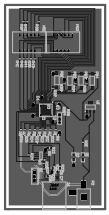
Title		
Size A3	Number	Revision
Date: 07.04.2015	Sheet of	
File: C:\Users\..\Sheet1.SchDoc	Drawn By: